BOBRICK

Technical Data

STAINLESS STEEL HOOK STRIP

B-232 x 24

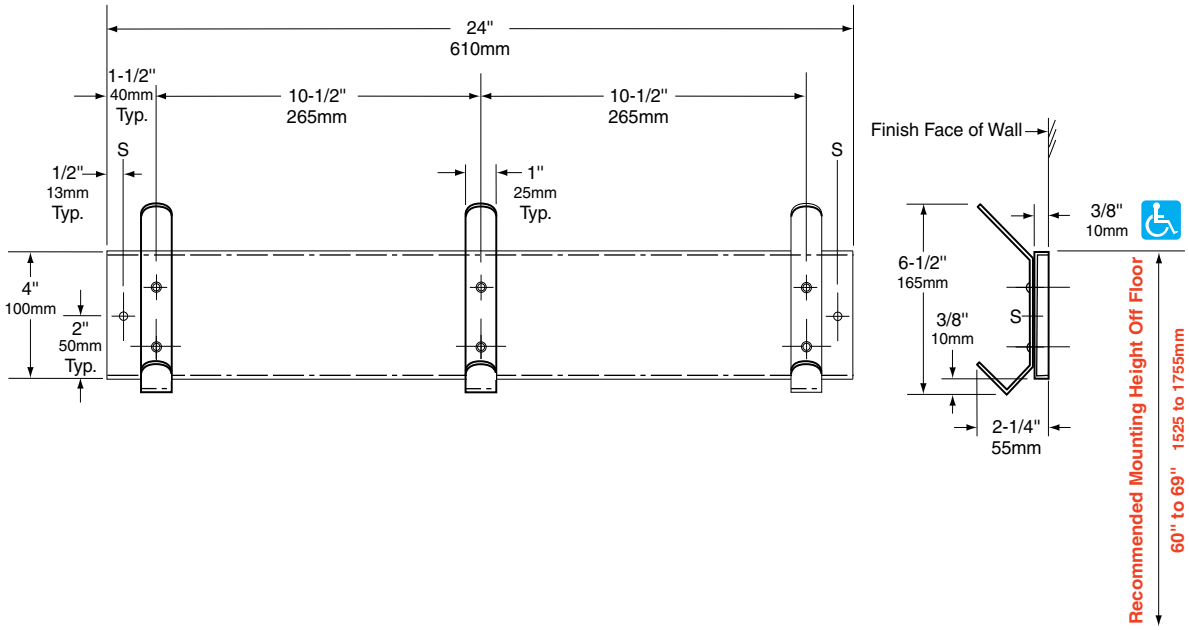

MATERIALS:

Hooks — 18-8 S, type-304, 12-gauge (2.8mm) stainless steel with satin finish. Each hook attached to mounting strip with two rivets.

Mounting Strip — 18-8 S, type-304, 18-gauge (1.2mm) stainless steel with satin finish.

INSTALLATION:

Mount unit on wall with screws (not furnished by manufacturer) at points indicated by an *S*. For plaster or dry wall construction, provide concealed backing to comply with local building codes, then secure unit with screws. For other wall surfaces, provide fiber plugs or expansion shields for use with screws or provide 1/8" (3mm) toggle bolts or expansion bolts.

SPECIFICATION:

Hook strip shall be type-304 stainless steel with satin finish. Hooks shall be 12 gauge (2.8mm) and mounting strip shall be 18 gauge (1.2mm).

Stainless Steel Hook Strip shall be Model B-232 x 24 of Bobrick Washroom Equipment. Inc., Clifton Park, New York; Jackson, Tennessee; Los Angeles, California; Bobrick Washroom Equipment Company, Scarborough, Ontario; Bobrick Washroom Equipment Pty. Ltd., Australia; and Bobrick Washroom Equipment Limited, United Kingdom.

The illustrations and descriptions herein are applicable to production as of the date of this Technical Data Sheet.
The manufacturer reserves the right to, and does from time to time, make changes and improvements in designs and dimensions.

Revised 7/30/10 Printed in U.S.A.
© 2010 by Bobrick Washroom Equipment, Inc.